热控制料管

Thermal regulated Shot Sleeve

BRONDOLIN

热控制 / *Thermal regulation*

热控制料管
Thermal regulated shot sleeve

近年来 在实务上针对开发大容量
及大尺寸铝合金的压铸件所造成的
热冲击致料管的温度控制益发重要。
没有比料管的使用寿命更重要的。
现今铸造厂均了解温度控制料管对生产
效率及料管使用寿命重要性不论铸件尺寸
及容积大小。

计划开始确认项目：

●可容许厚度，有时为了最佳的压射周期必须增加厚度。

●选择适宜的材料是很重要的。
原材料的选购、质量控制、热处理制程等
确保最佳的晶粒成分，全部在我们工厂内完成。

经完整热处理流程我们可确保：

●最佳的机械性质。

●全新的氮化制程。
配件精度为另一个重要的项目。

澎胀系数经精确的计算，以避免压缩应力进入模具及模板。
优良的料管工作环境，将大幅提升柱塞的功能。
如此经由优良的料管可保持生产参数 确保铸件质量。
此科技有利于压铸厂：

● 压射工具更高的使用寿命。

● 更好的产品质量。

● 稳定的大量生产。

In recent years, the practice of accurately controlling the temperature of the Shot Sleeve is becoming increasingly important. Originally developed for larger sizes, where the high volume of aluminium causes thermal shock.
These are the factors, more then others, that determinate shot sleeve life time.
Now, many die casters now realize that temperature control of the sleeve is important for all sizes and volumes to extend tool life and productivity.
During the project is important verify:

- Thickness available. Sometime, to accommodate the optimal circuit, is necessary need to be increased
- Selection of the proper steel is very important
  Where to buy, quality control and our heat treatment process, ensure the best micrograph structure.

These control are made in our plant.
With complete thermal process control, we could en sure:

- The best mechanical properties
- A new nitration process, (Tq air) recently developed, obtain a particular surface elasticity

Fitting tolerances are another important point in the project.
Expansion is properly calculated, due to avoid compression stress when it is into die and machine plate.
Good shot sleeve working condition allow good plunger function.
With sleeve developed as explain production process parameters can be maintained and respected during time, allowing casting quality.
With this technology customer benefit are:

- Injection tools longer life
- Better production control
- Quality production under control

问题 / *Problems*

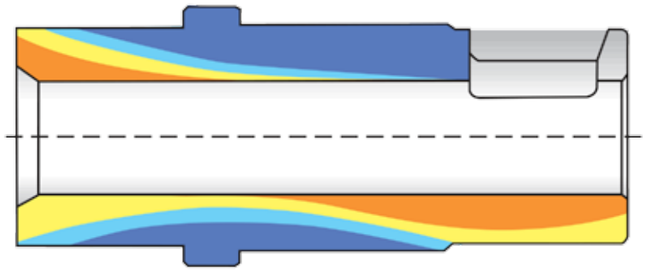

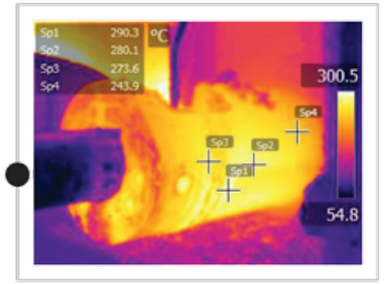

过热案例
Overheating example

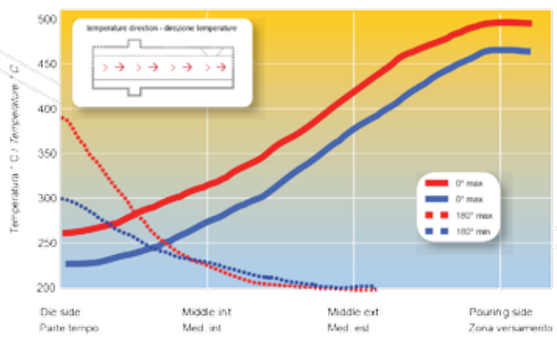

Thermal graphic helps us to understand

- *Shot sleeve cause prob lems*
- *Relative consequence on plunger life time and his friction inside sleeve*

Hottest zone are in opposite area:

- *Pouring area (lower zone)*
- *Die side, (up zone)*

This unbalance thermal situation cause deformation even lengthwise and transversal.

Thermography
热影像

热像图帮助我们了解

●导致料管产生问题。

●相关后果是造成柱塞于料管内严重的摩擦及寿命。

热区位于相对部位：

● 浇注区（低温区）

● 模具边（高温区）

此种不均衡的热导致料管横向和纵向的变形。

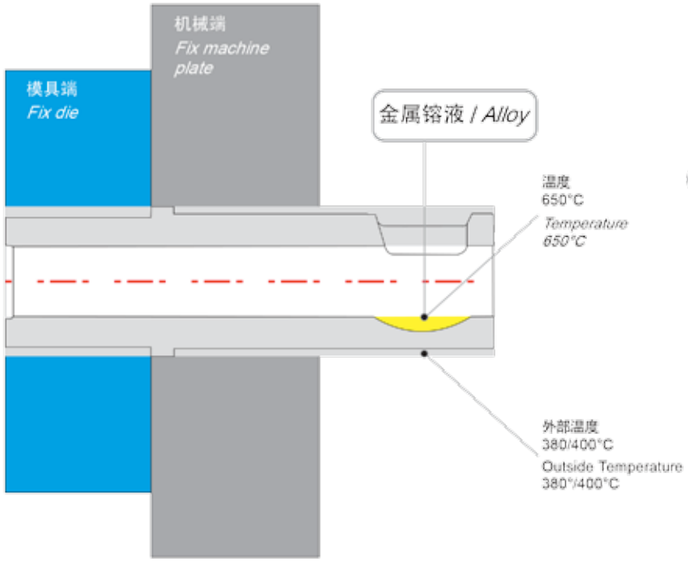

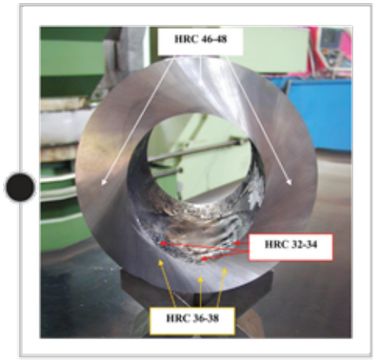

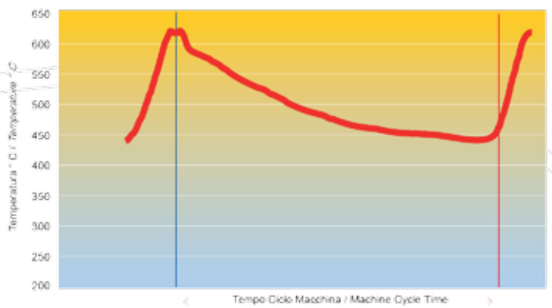

浇注部位的侵蚀是冷室机最常见的情形。

主要原因是浇注区表面过热。

每一压射行程：

- 铝液不断间歇将料筒加热。
- 氮化层将失去硬度及特性。
- 造成侵蚀的后果。

热控制为主要目标为：

- 避免热冲击，龟裂主要因为热应力。
- 保护氮化层要避免过热现象，避免侵蚀。

Erosion 侵蚀

Erosion in pouring area is the most diffuse problem in the cold chamber die casting process.
Main cause is the overheating on the surface pouring area.
At every cycle,

- *Alloy heat the steel time by time*
- *Nitration surface lose its characteristic and hardness*
- *Consequence is erosion*

The thermoregulation has as main target:

- *Avoid thermal shock, as main cause of crack due to thermal stress*
- *Avoid overheating to protect nitration surface, where erosion is the consequence*

问题 / *Problems*

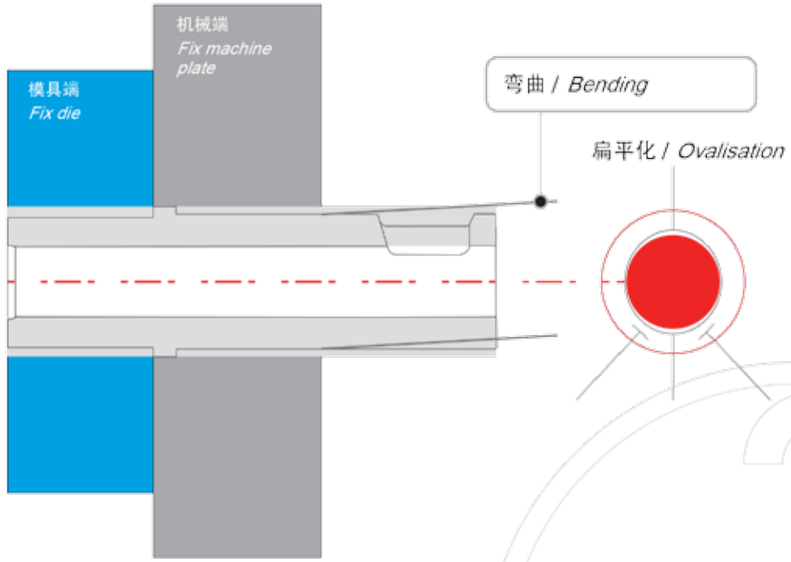

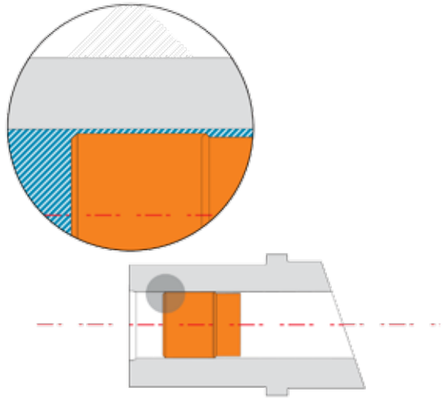

料管内温度不同肇因为：

- 料管外部的变形(机械端的外侧)柱塞口的扁平化，可能发生于当铝液进入柱塞和料筒之间。
- 变形同时导致射出系统中线错误，在柱塞和料管之间产生过高的摩擦。

Deformation 变形

The different temperature in the shot sleeve cause:

- *Deformation in the exter nal part (out of the ma chine plate), with ovaliza tion of plunger hole. Seizure are possible due to alloy go between plung er and sleeve. Early ware of plunger and sleeve are consequence.*
- *Deformation cause also un alignment of injection sys tem (rod-sleeve). High friction is a consequence with relative plunger and sleave ware.*

问题 / *Problems*

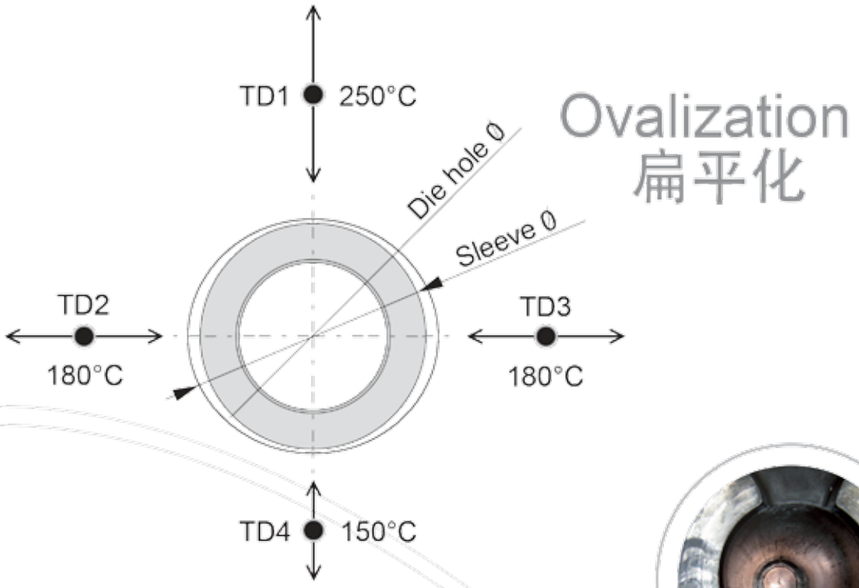

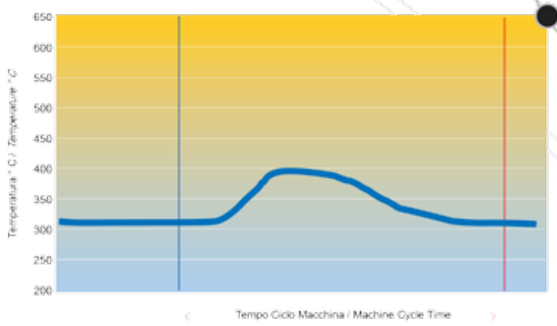

模具侧为重要的部位因为射出压力关系。
当铝液进入柱塞和料管之间时，
该部位良好的热平衡以避免变形或扁平。
模具上部的温度较高。

The die side is critical area due to injection pressure.
This area need a good thermal balance to avoid deformation and/or ovalization that cause aluminium between plunger and sleeve.
The upper die side is where temperature is much higher

对策/ *Solutions*

循还管路
Circuit

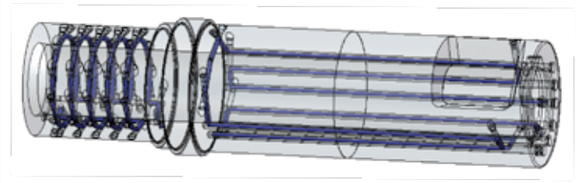

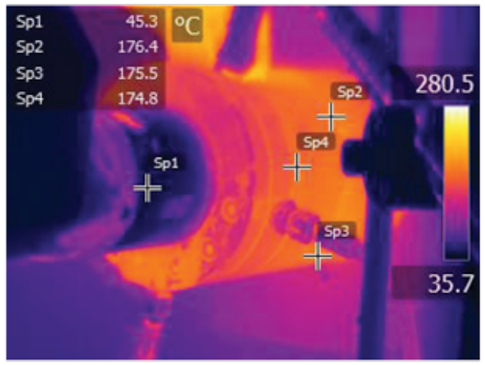

使用油或水的温度控制装置，则料管：

- 生产前加热至180度C。
- 保持温度于180-200度C之间。

避免热冲击其优点为:

- 避免材料达于本身热抗值极限。
- 保护淡化层表面。
- 降低材料的侵蚀。

为达到上述优点则预热料管必须遵行。

热控装置循环设计基于客户的参数：

- 机械闭合力量。
- 铸件重量。
- 铸件合金的特性及温度。
- 柱塞润滑系统及型式。
- 柱塞冷却水流
- 行程
- 二次阶段速度

根据以上的信息，我们：

- 规划系统
- 模具侧的流道尺寸

特殊的循环系统没有焊接点。

避免泄漏以维持产品质量。

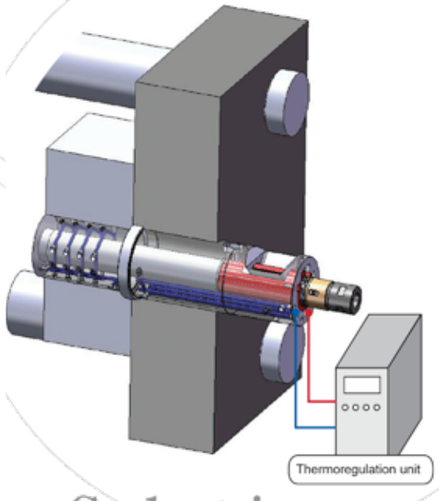

With thermo unit using dia-thermic oil or pressurized water, shot sleeve is:

- *Warm up at 180°C before starting production*
- *Balanced at 180-200°C*

Reducing thermal shock during production, benefit are:

- *Avoid that steel reach thermal resistance limit*
- *Protect the nitration surface*
- *Longer resistance at erosion problem*

To reach these benefit is very important warm up the sleeve before every start up.

Thermo regulation circuit project is based on following customer parameters:

- *Machine Closing force*
- *Cast weight*
- *Alloy characteristic and temperature*
- *Plunger Lubrication system and type*
- *Plunger cooling water flow*
- *Cycle time*
- *Second phase speed*

Based on these information we:

- *Project the system*
- *Dimension the channel*

In the die side, a special circuit without welding is done, to avoid leaking problem and saving quality production due to scrap for impurity problem.

4

Solution
Soluzioni

BRONDOLIN

和辰国际有限公司
TEL:86-13773112674
FAX:86-512-82098925
E-mail:peastarcn@aliyun.com

Brondolin S.r.l.
via Bonicalza, 142 › 21012 Cassano Magnago (Va) Italy
Tel. +39 0331203427 › Fax +39 0331205978
www.brondolin.it › info@brondolin.it